©Copyright CBT Supply dba SMARTdesks

MATERIAL:	
FINISH:	
EDGE:	

BOTTOM (BACKER) SIDE SHOWN

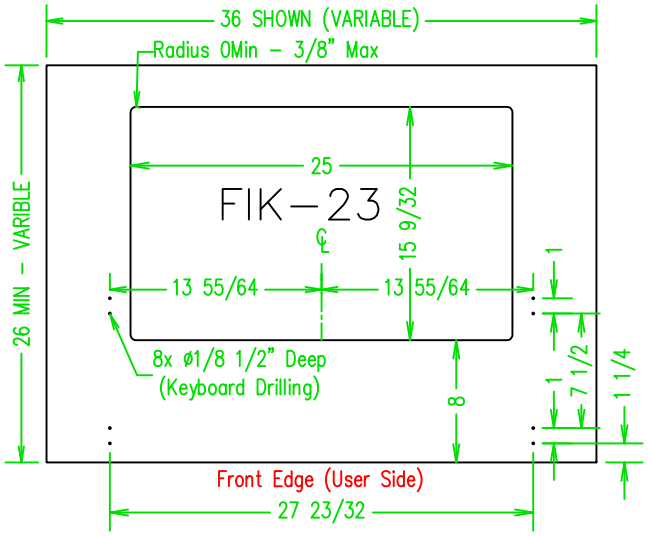

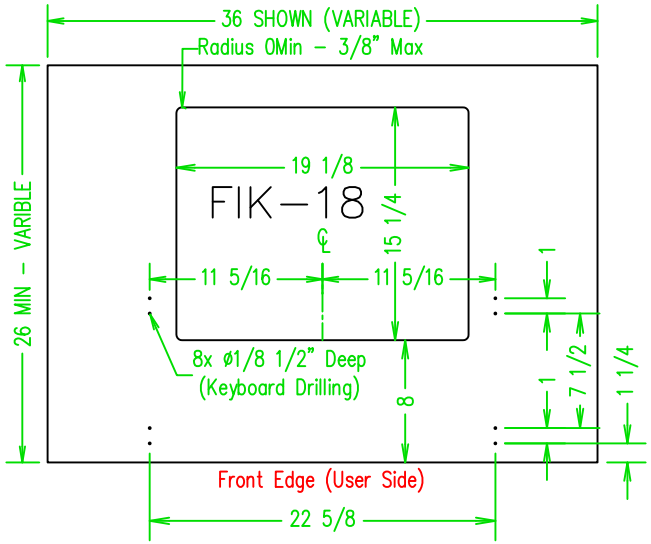

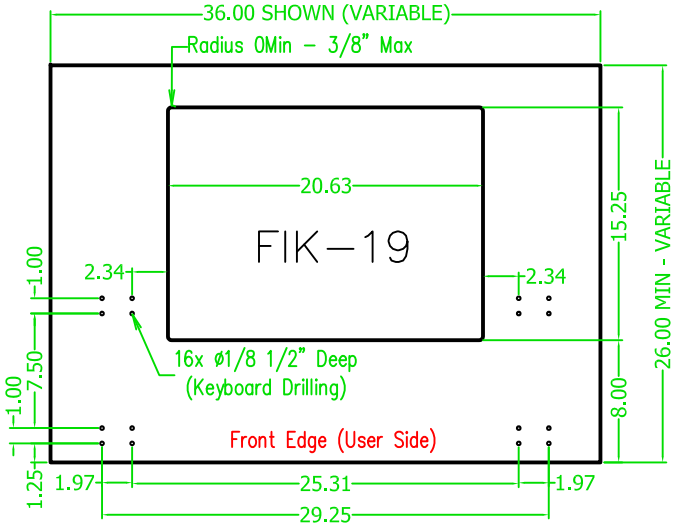

REFERENCE ONLY
(NOT RELEASED FOR PRODUCTION)

REVISIONS			
SYM	DATE	BY	DESCRIPTION

TOLERANCES
UNLESS SPECIFIED OTHERWISE
DECIMALS
.X ± ____
.XX ± ____
.XXX ± ____
ANGLS ± ____

PART NAME	FIK18, FIK19, FIK23 Cutout/Keyboard Drilling
DATE:	DRWN.BY:
SCALE:	CAD NO.
CHK'D BY:	CNC NO.

NOTICE: This drawing is the property of CBT Supply, Inc. dba SMARTdesks and contains proprietary information that is not to be used except in the consideration of bids or proposals tendered herewith. Reproductions or or copying of this drawing, in whole or part, is prohibited.

SMARTdesks™
514F Progress Drive
Linthicum, MD 21090
800.770.7042
www.Smartdesks.com

PRODUCT GROUP
DRAWING NO.
REV.