SMARTdesks™ DEMI™ Product Specs

TDE-844228-xxM Triple Half-Round Computer Table for iMAC® and other Combined VDT/CPUs (Grade 9-Adult)

Materials and Construction Specifications

Top Surface - 0.048" thick, high-pressure laminate (exceeds performance requirements of NEMA 3-1995 Grade HGS) bonded to 30mm thick 50 lb. medium density particleboard with phenolic resin impregnated backer sheet. All edges are banded in 3mm thick, color-thru PVC mechanically applied under pressure and heat.

Wire Access Grommet – An 80mm diameter wire access grommet with cover is placed in the desk top to channel cables below the worksurface.

Base Panels - 0.020" thick melamine coated finish thermally fused to both sides of 19mm thick 47 lb. medium density particleboard. All exposed edges (including bottom edges in contact with the floor - to prevent water damage) are banded in 3mm thick, color-thru PVC mechanically applied under pressure and heat.

Construction – European 32mm woodworking technology employing steel-to-steel pin and cam connections (thru-drilled for full panel integrity) where needed to provide durability, ease of assembly and modularity.

Ventilation –Panels are assembled to permit adequate airflow around components.

Floor Glides - All units are provided with standard adjustable 1¼" steel leveling glides with vinyl shield attached to metal inserts in the vertical support panels. 3/4" height edjustment range.

Integral Wire Management™ - Vertical cable chase permits access to floor outlets and ganging between pairs of tables.

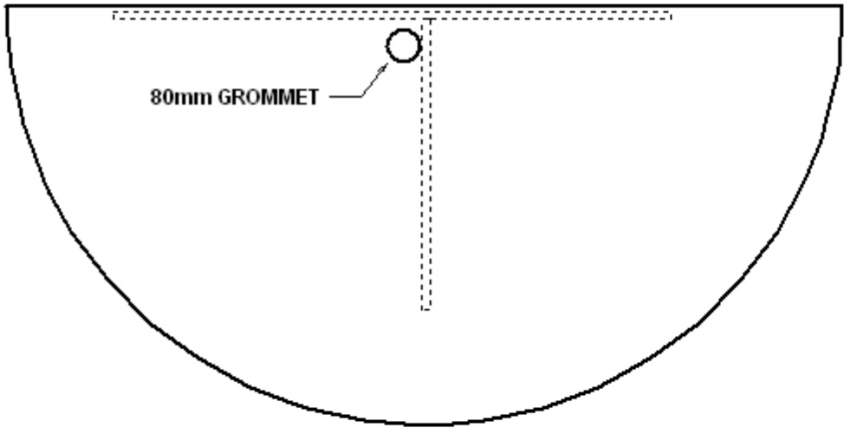

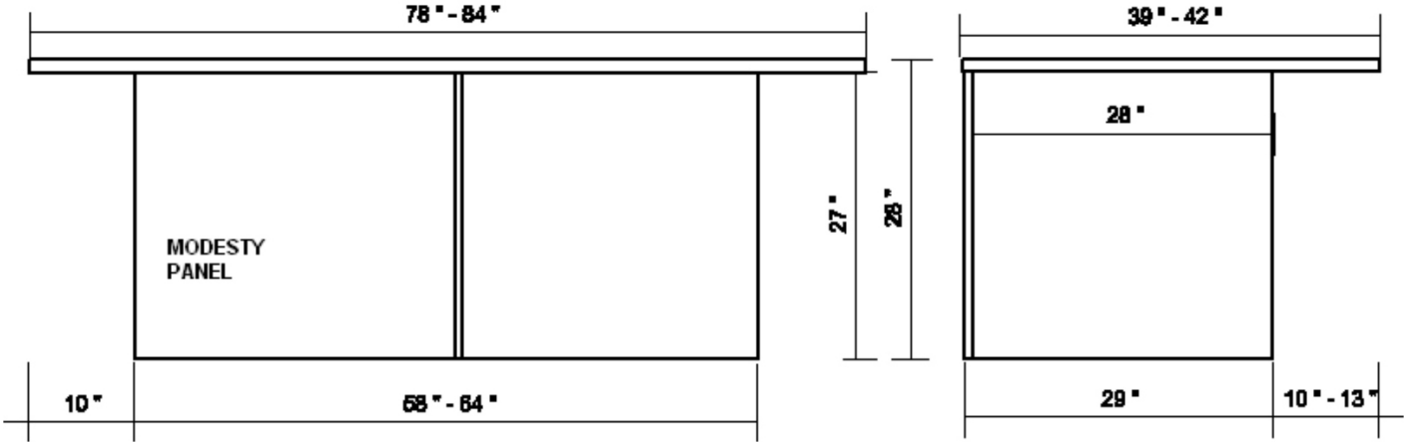

Copyright © 2002 • SMARTdesks™ • PO Box 4463 • Lutherville, MD • 21094 • Tel: 800.770.7042 • Fax: 877.620.7411