SMARTdesks™ SR Series Product Specs

SSR-443030-TK9 Single Station Semi-Recessed (14" - 19") Monitor Workstation

Materials and Construction Specifications

SR Monitor Cutout – With soft vinyl T-mold edges to accommodate recessed monitor. Sized to accept up to 19" VDT.

Monitor Shelf – Custom Assembly System™ provides height/depth/angle adjustable monitor support platform offering additional structural strength once fixed at optimum height. Shelf is edge-banded in 3mm PVC to provide a soft, rounded, user-friendly finish.

Tower CPU Bay – 10" bay accommodates mid-tower CPU case.

Top Surface - 0.048" thick, high-pressure laminate (exceeds performance requirements of NEMA 3-1995 Grade HGS) bonded to 30mm thick 50 lb. medium density particleboard with phenolic resin impregnated backer sheet. All edges are banded in 3mm thick, color-thru PVC mechanically applied under pressure and heat.

Base Panels - 0.020" thick melamine coated finish thermally fused to both sides of 19mm thick 47 lb. medium density particleboard. All exposed edges (including bottom edges in contact with the floor - to prevent water damage) are banded in 3mm thick, color-thru PVC mechanically applied under pressure and heat.

Keyboard/Mouse Platform – Pullout platform at 27” above floor match base panel finish and edge trim. Mounted with full-extension ball bearing slides with lifetime warranty.

Construction – European 32mm woodworking technology employing steel-to-steel pin and cam connections (thru-drilled for full panel integrity) where needed to provide durability, ease of assembly and modularity.

Ventilation –Panels are assembled to permit adequate airflow around components.

Floor Glides - All units are provided with standard adjustable 1¼” steel leveling glides with vinyl shield attached to metal inserts in the vertical support panels. 3/4" height edjustment range.

Integral Wire Management™ - Vertical and horizontal wire channeling, 80mm side access grommets are positioned to align with other components and wall power/data access points.

Copyright © 2002 • SMARTdesks™ • PO Box 4463 • Lutherville, MD • 21094 • Tel: 800.770.7042 • Fax: 877.620.7411

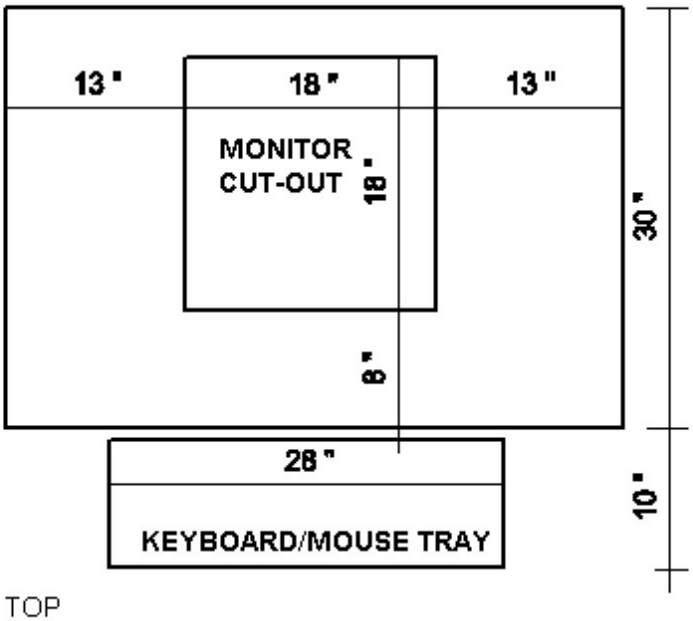

TOP

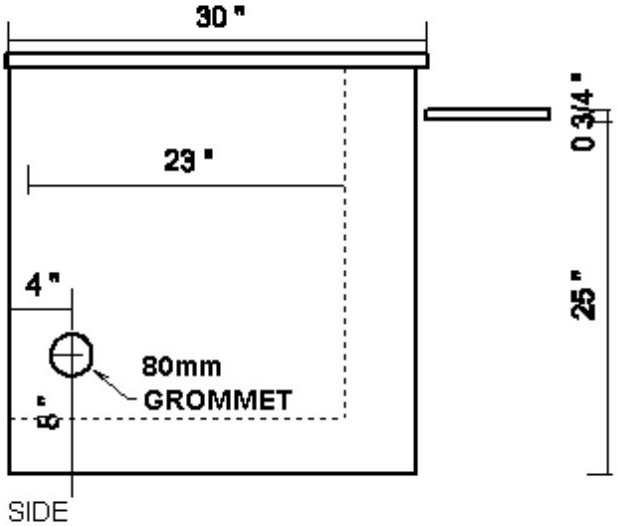

SIDE

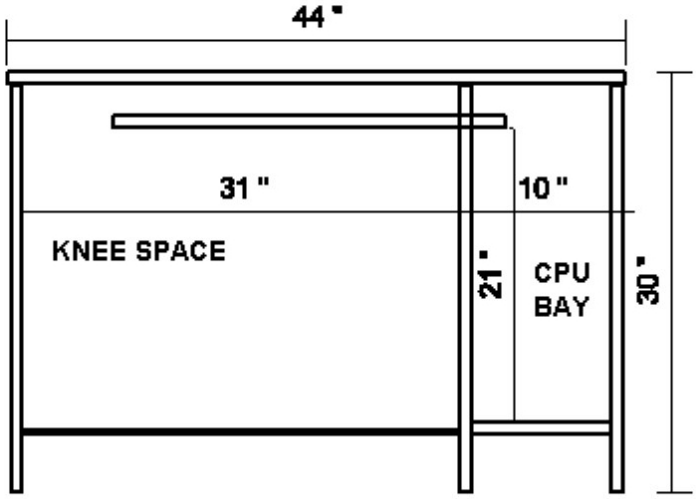

FRONT

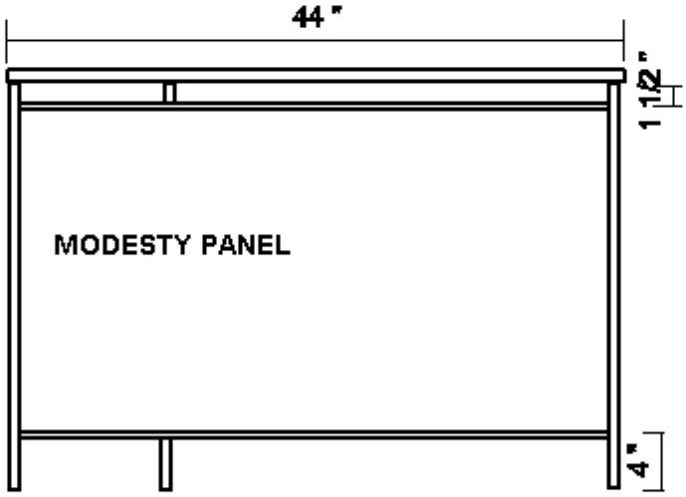

REAR

Copyright © 2002 • SMARTdesks™ • PO Box 4463 • Lutherville, MD • 21094 • Tel: 800.770.7042 • Fax: 877.620.7411